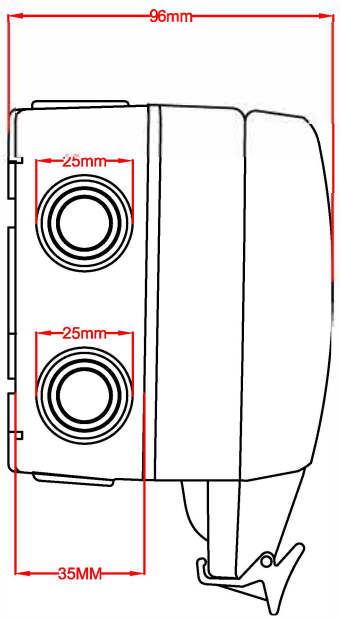

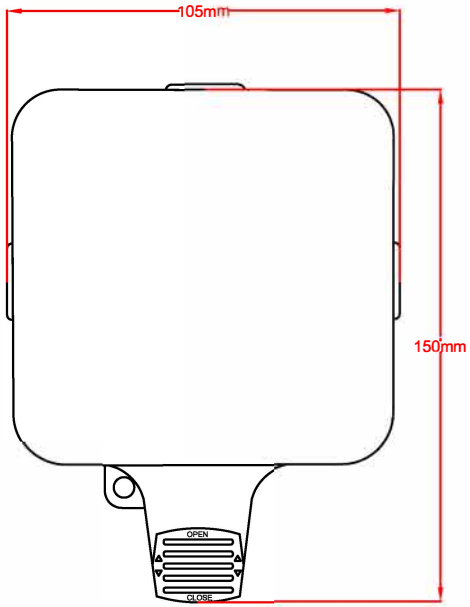

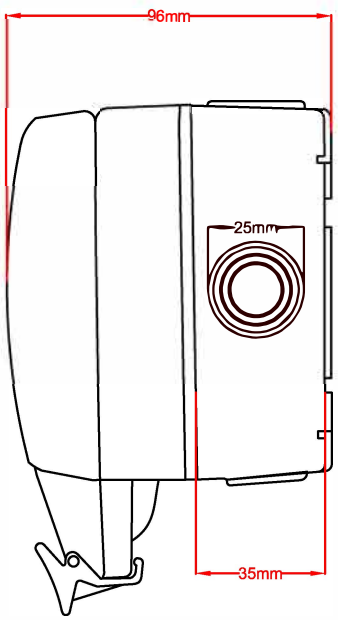

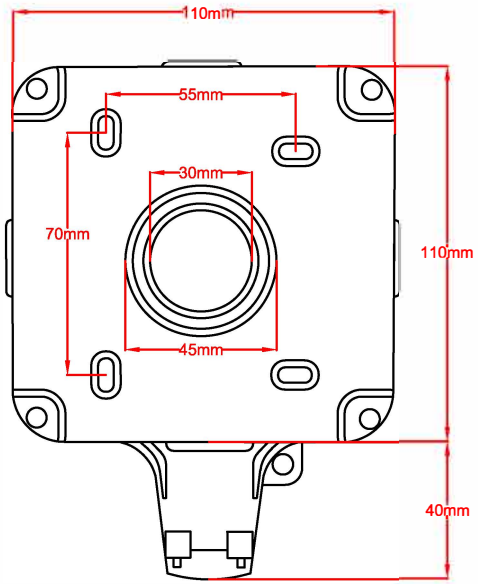

Material :PC material
Sealing ring: Rubber material
Product size:104*150*96mm
Product hole distance:
Horizontal:55mm
Longitudinal direction:70mm

SYM	Number	Bill No. of Alteration	Signature	Date

Drawn	Ding jian bo	2015.12.28	Tolerance
Checked	Ge pei jun	2015.12.28	0.00-20.00 ±0.10 20.00-50.00 ±0.15 50.00-100.00 ±0.20 100.00- ±0.25 Angle ±30'
Approved	Wang wei jun	2015.12.28	

Material				Item No.	
Angles Projection	Size	Scale	Unit	DWG No.	TR-SB78
	A4	X:1	mm	Part Name	Deepening waterproof box
Sheet	1 OF 1	Version: A/0		ERP Part No.	