MARK	DATE	ECN NO.	DESCRIPTION	REV.	DESIGN
1					

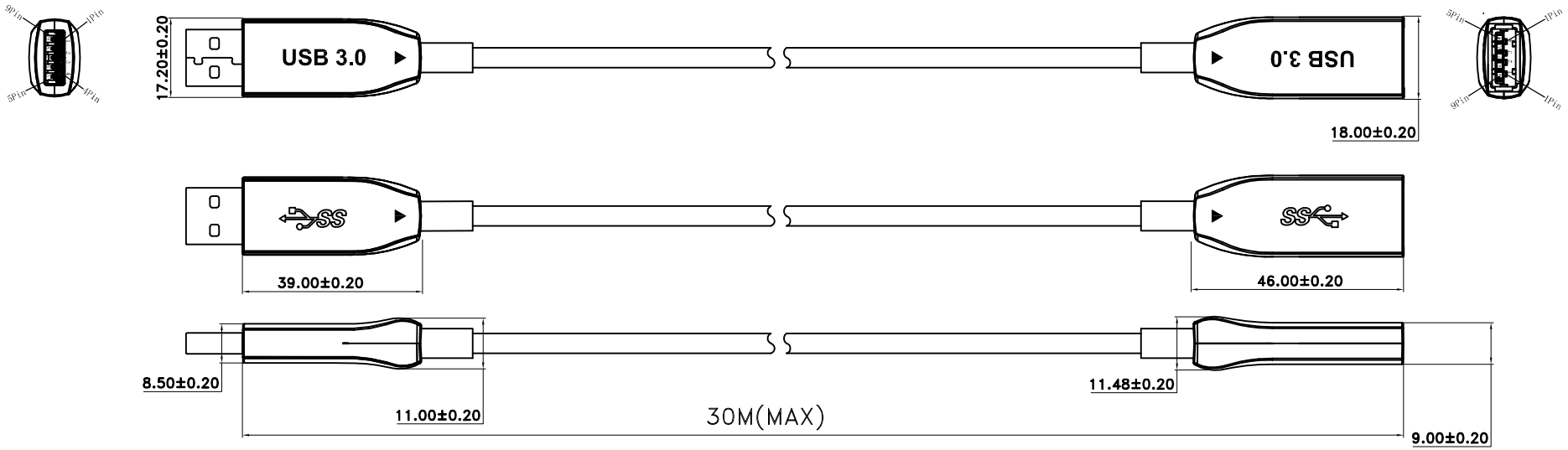

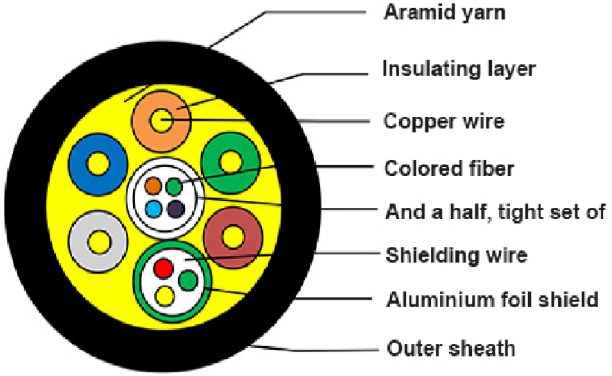

NOTE:

- Compatible with USB Gen1 Spec 5 Gbps standard.
- No loss of signal
- Hybrid optical cable with fiber and copper wire
- PIN gold plated, shell gold plated
- Environmental Specifications:For Indoor use only;
- Operating temperature:-40℃ to 70℃
- Minimum bending radius 20mm
- Max.tension force:100N
- 4core OM3 Multimode Fiber(high speed data)and 7core copper cable
- Round cable Black PVC jacket
- RoHS 2.0 & REACH compliant
- Packing:package 1pc reel

DIREKTRONIK
Dataprodukter utöver det vanliga

UNLESS OTHERWISE SPECIFIED TOLERANCE			
ANG	TOL	DIM	TOL
.X	±3.0°	.X	±0.10
.XX	±2.0°	.XX	±0.05
.XXX	±1.0°	.XXX	±0.03

图号		日期	
制图	CLH	2020.09.17	
审核			
核准			

品名	USB 3.0 A Male to A Female AOC			
产品编号				
	单位	比例	页码	版本
	mm	1:1	1/1	1