DIREKTRONIK

Dataprodukter utöver det vanliga

Best.nr: 20115770

ALL DIMENSIONS IN mm UNLESS OTHERWISE STATED

Revision Call-outs: B Part Revisions (letters)

2 Drawing Revisions (numbers)

TOLERANCE ±0.25mm UNLESS OTHERWISE STATED

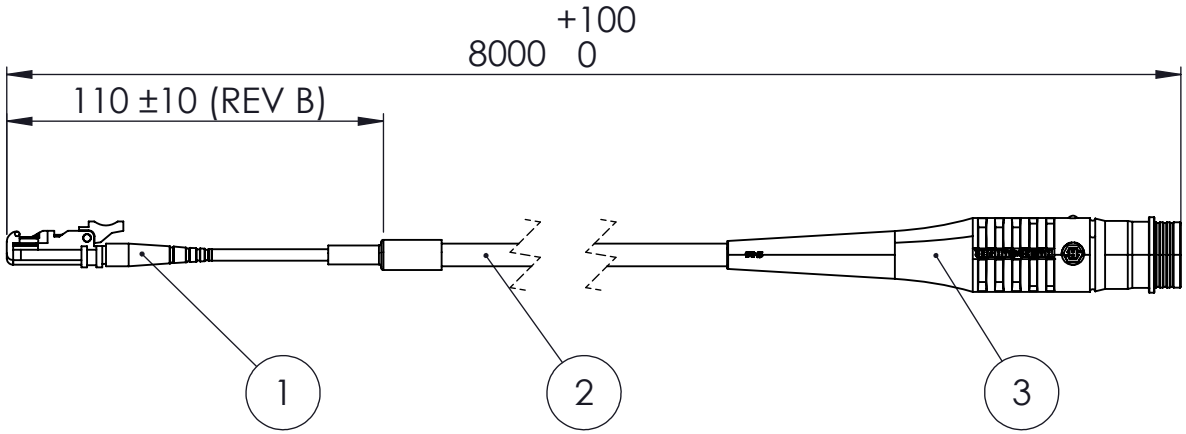

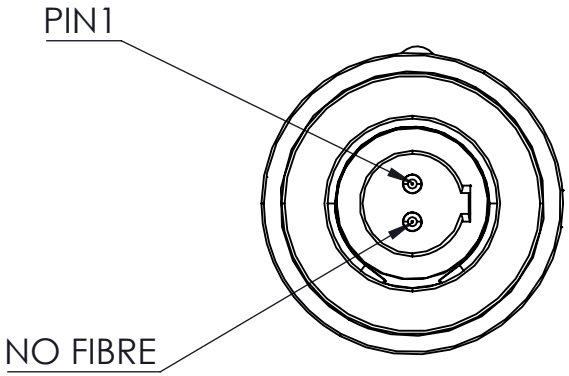

ITEM NO.	DESCRIPTION
1	E2000 / APC WITH GREEN BOOT
2	OPTICAL CABLE
3	Q-ODC2 PLUG INCLUDING PUSH-ON DUST CAP AND RETAINING CORD (REV 2)

DIREKTRONIK

Direktronik AB tel. 08-52 400 700 www.direktronik.se